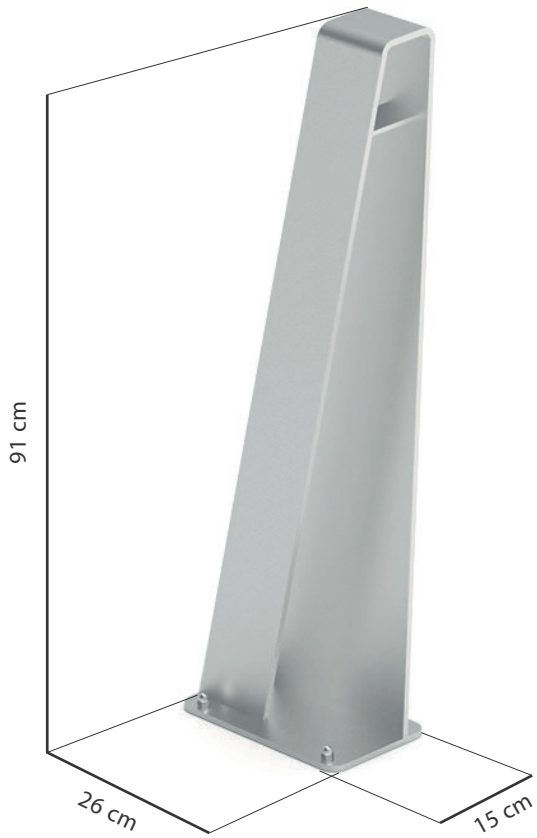

## GENERAL TECHNICAL DATA

**dimensions:**

- height: 91 cm
- width: 26 cm
- depth: 8 cm
- depth with mounting flange: 15 cm

**weight:** - 13 kg

**materials:** - stainless or carbon steel

## DESCRIPTION

Welded construction made of steel sheets 6 x ~(78 - 215) mm thick, of carbon steel s235Jr galvanized and powder coated according to RAL palette or entirely of ground stainless steel 1.4301.

One bicycle can be attached to the stand.

All street furniture elements must be properly anchored according to the manufacturer's technical instructions. The manufacturer is not responsible for damage caused by negligent use or noncompliance with the instructions.

PROJEKTANT

product: Reliq bicycle rack 05.017

version: 1

designer: Michał Gzela

In accordance with the Polish Law on Copyright and Related Rights of 04.02.1994 (Official Journal of Laws No. 24, item 83, corrected: Journal of Laws No. 43, item 170) and in accordance with the EU copyright legislation including all EU directives and regulations on copyright , Zano Mirosław Zarotyński Company, reserves the copyright of drawings, descriptions, 3D models, renderings, graphics, content contained in offers, attachments to offers and all other documents. Its content is the intellectual property of ZANO Miroslaw Zarotinski company. The use of author's ideas, solutions, copying, distribution of photos, graphics or fragments of graphics, descriptive texts, for profit, without the permission of the author - ZANO Mirosław Zarotyński company - is prohibited and constitutes a copyright infringement and is punishable.

## FRONT VIEW

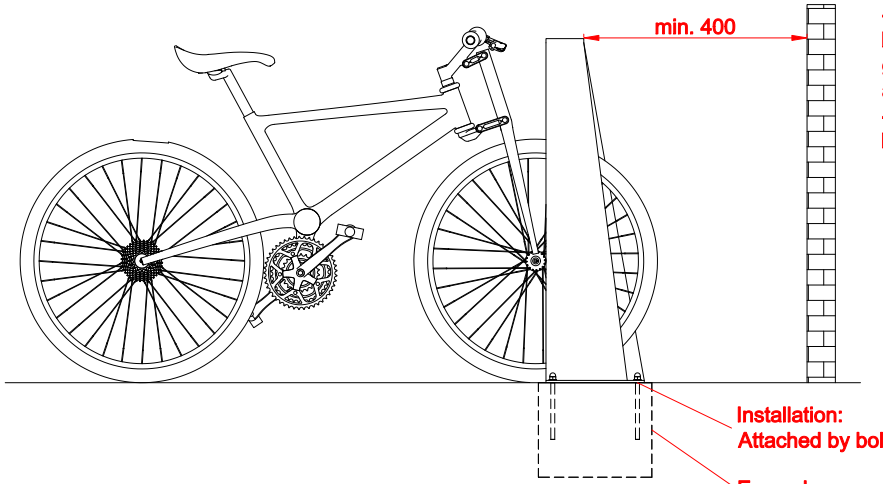


Steel types:
- Construction steel (S235JR, DC01) galvanized and powder coated according to RAL palette
- Stainless steel (1.4301) brushed

Installation:
Attached by bolts to foundation

Exemplary concrete foundation

## SIDE VIEW

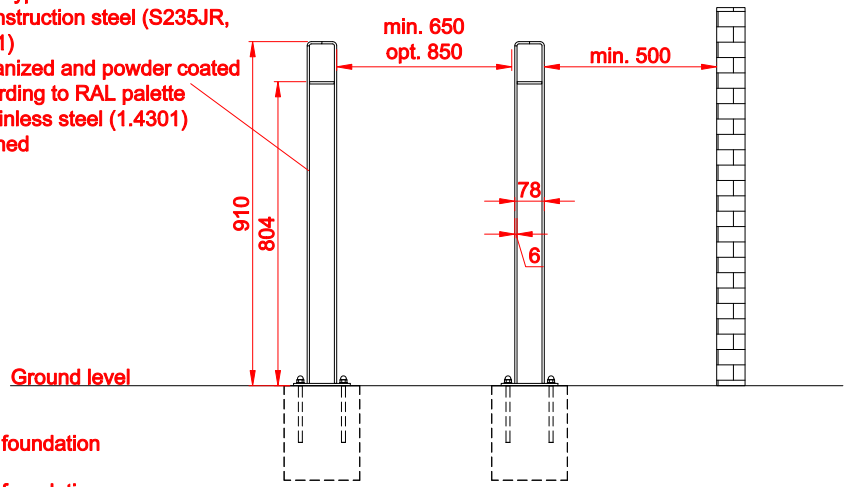


## TOP VIEW

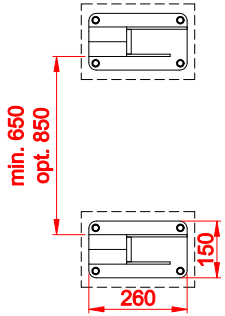


## ISOMETRIC VIEW

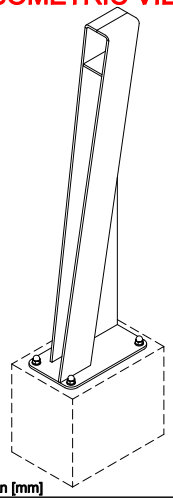

## MOUNTING HOLES SPACING

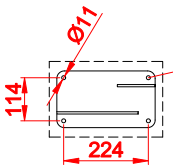


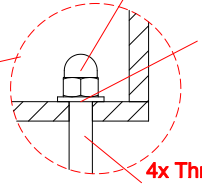

4x Nut
M8 DIN1587

4x Washer
M8 DIN125

4x Threaded rod
M8x150 DIN976-1

Dimensions given in [mm]

# Reliq Bicycle Rack 05.017

In accordance with the Polish Law on Copyright and Related Rights of 04.02.1994 (Official Journal of Laws No. 24, item 83, corrected: Journal of Laws No. 43, item 170) and in accordance with the EU copyright legislation including all EU directives and regulations on copyright , Zano Miroslaw Zarotyński Company, reserves the copyright of drawings, descriptions, 3D models, renderings, graphics, content contained in offers, attachments to offers and all other documents. Its content is the intellectual property of ZANO Miroslaw Zarotinski company. The use of author's ideas, solutions, copying, distribution of photos, graphics or fragments of graphics, descriptive texts, for profit, without the permission of the author - ZANO Miroslaw Zarotyński company - is prohibited and constitutes a copyright infringement and is punishable.

ZANO Street Furniture
Lindego 7A, 30-148
Cracow, Poland

phone: +48 12 200 20 53
email: office@zano.pl

| | |
|---|---|
| Number: | 090518-v1 |
| Sheet: | A4 |
| Scale: | 1:20 |
| Mass: | 13 kg |